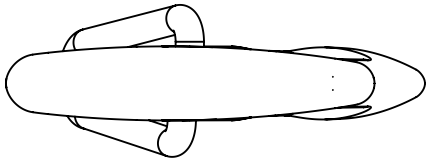

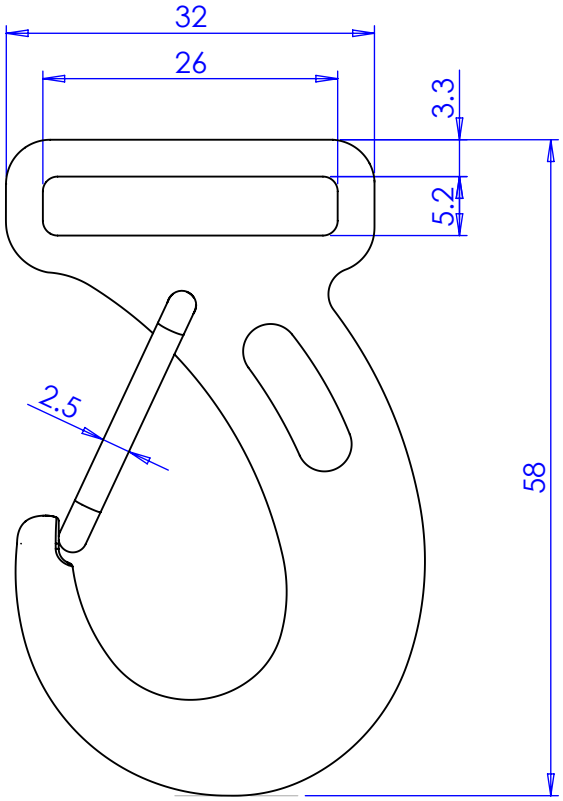
32
26
3.3
5.2
2.5
58