Voltage	12V
Nominal Current at	0.16A at 12V ±20%
Power Consumption	2W at 12V ±20%
Light Output	145 lm(裸測)
Max Illuminance	195 Lux/50cm
LENS	PC
IP Rating	N/A
EMC	EN 60945
Operating Temperatures	-30+65°C
SW Function	ON/OFF

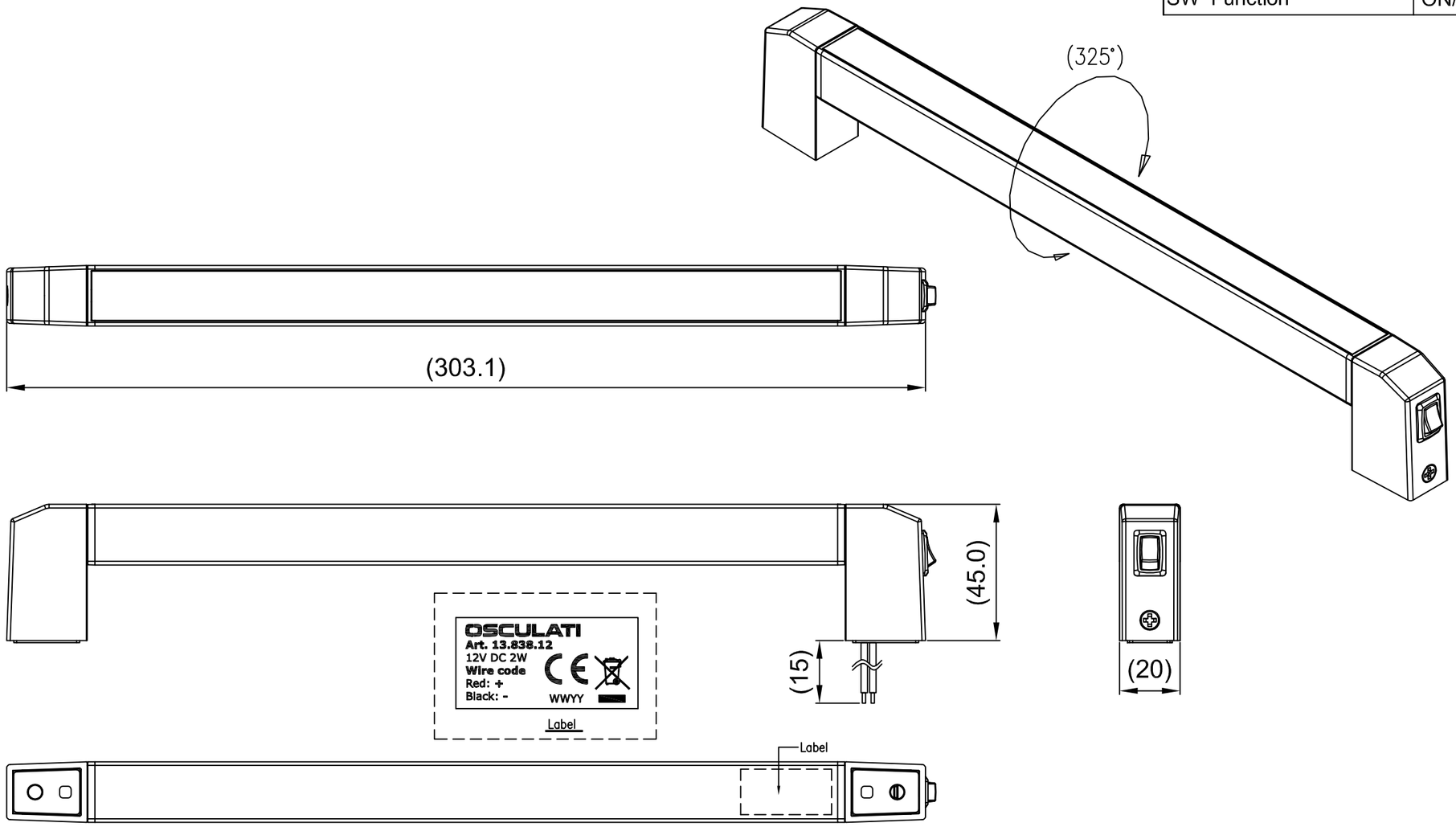

Date	Name	Description	△ No.

Drawn	Checked	Approved			Model Name	
			Customer No.	13.838.12	Model No.	REV.
2022/11/09			Unit	mm		0