Continuous Rating	300 Amps 50VDC Max.
Intermittent Rating	500 Amps
Cranking Rating	1000 Amps 30 sec.
Contact Resistance	50m ohm Max.
Insulation Resistance	DC 1000V 100M ohm Min.
Dielectric Strength	DC 2000V 1 minute
	AC 1000V 1 minute
Operation Temperature	-20°C~80°C
Switch Function	ON/OFF/OUT
Actuation Force	9±3 Kgf-cm

Mounting Hole

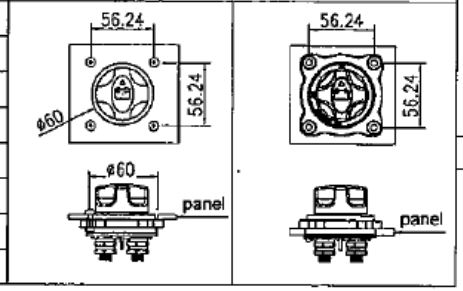

Actions Diagram

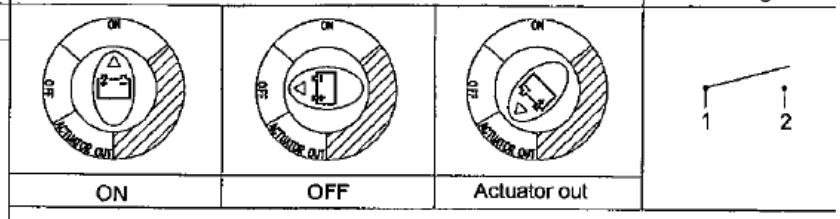

ON | OFF | Actuator out

Circuit Diagram

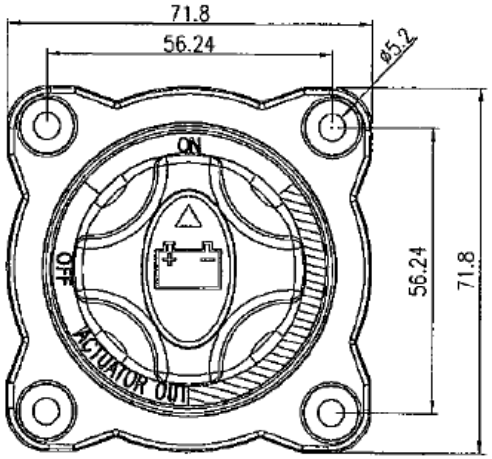

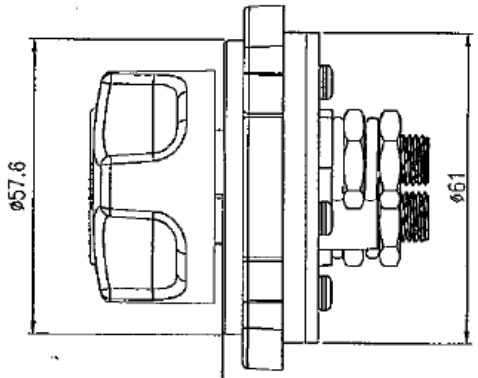

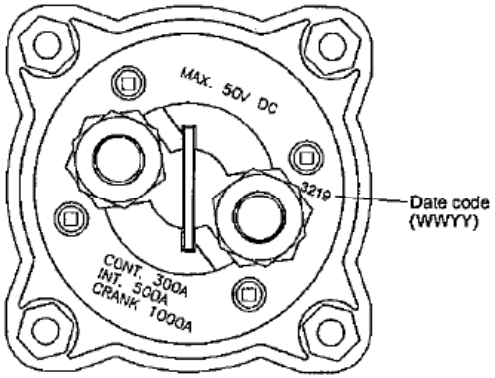

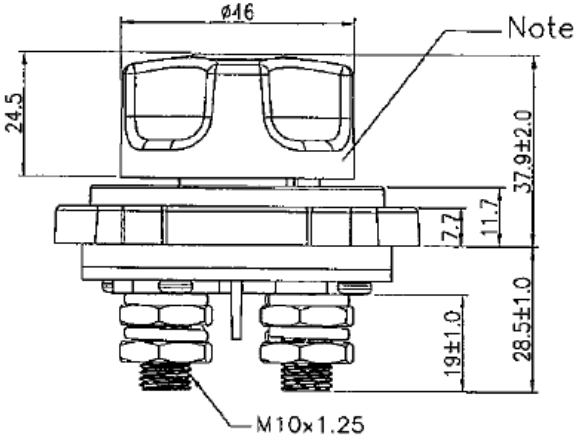

Ingress Protection : IP68
(1.8M/30minutes)
Only for operating surface

Material :
Actuator,Housing,Cover : PBT(UL flame:94V-0)
Contact, Screw : copper alloy
Nut : nickel plated brass
Washer : SUS304

Note:
1.Tolerance is ±0.5mm(0.02") unless other notice
2.Actuator could be taken out at Actuator Out position
3.Actuator Out to OFF position : Push and turn

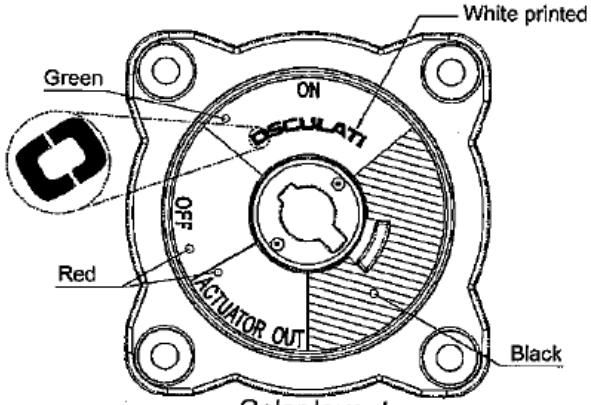

Color layout