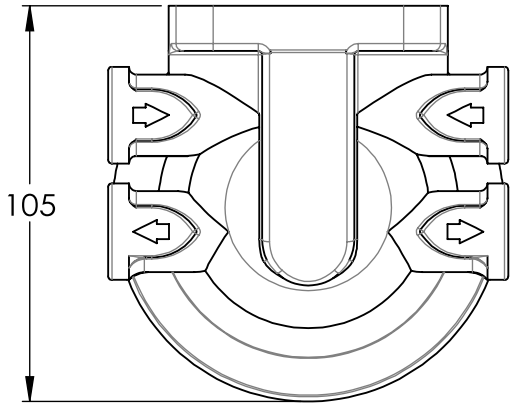

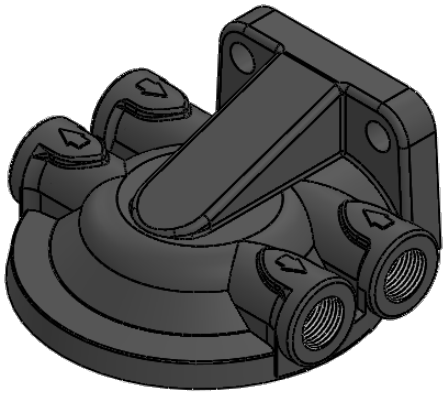

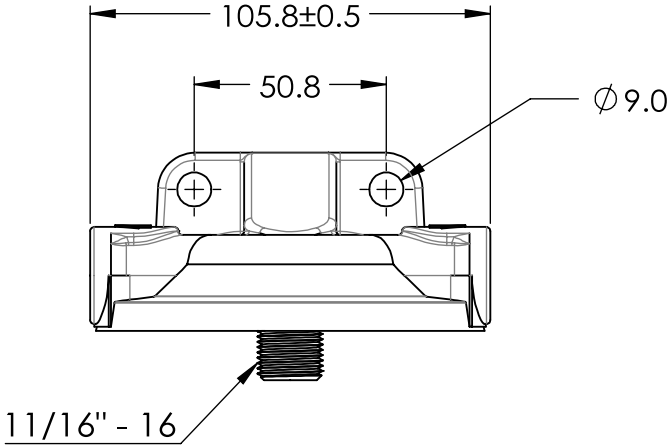

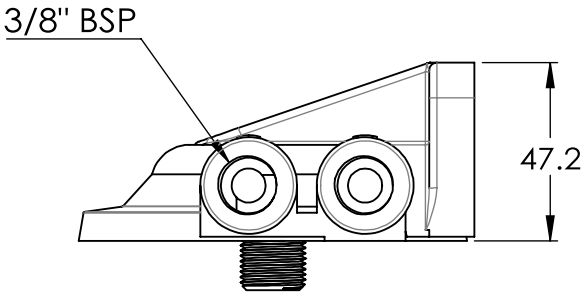

	Aluminum				
	Powder Coated				Powder Coated Aluminum Filter Mounting Head